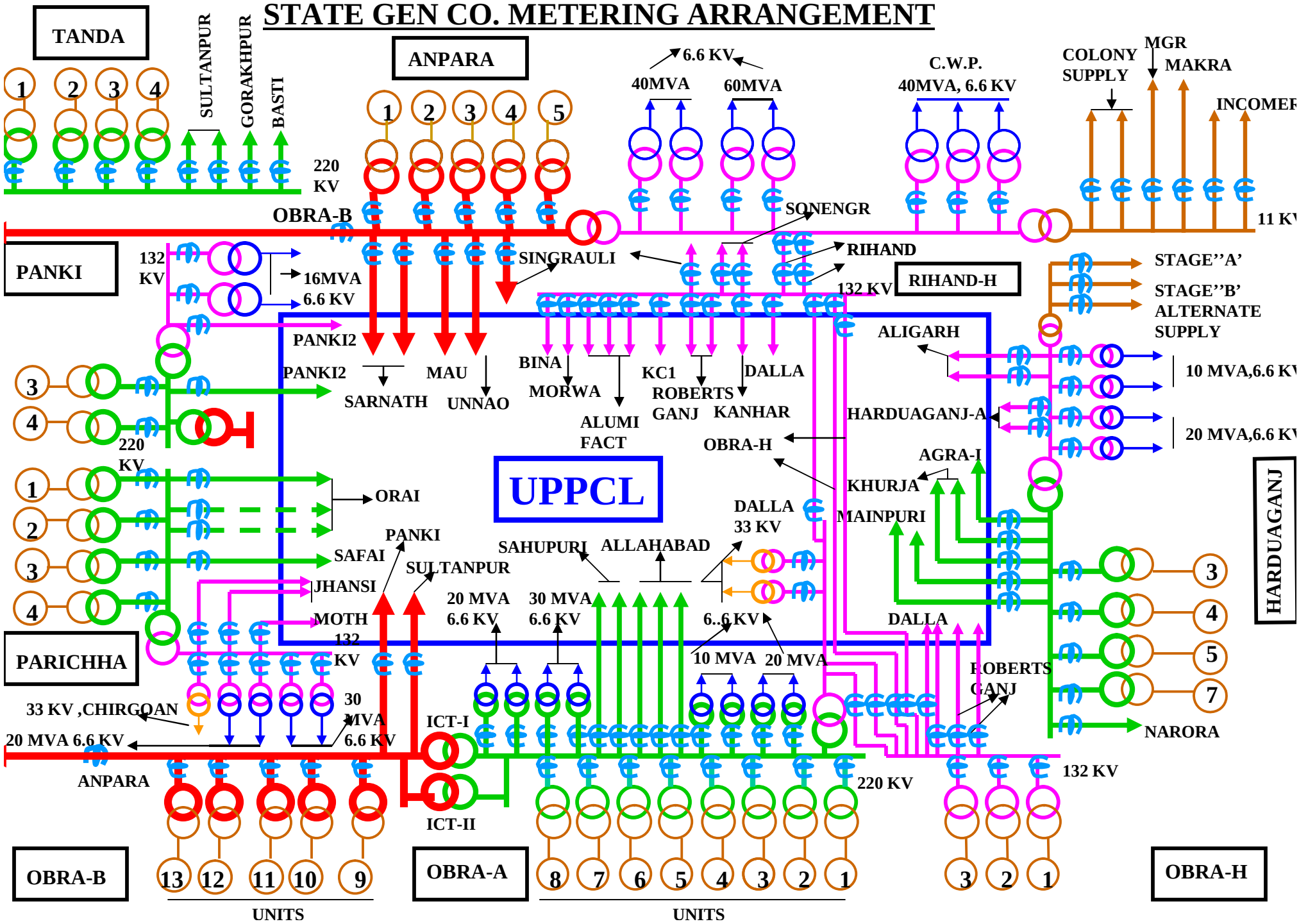STATE GEN CO. METERING ARRANGEMENT